Conduit Support Brackets

Forma-Tred Conduit Support Brackets

Formetco Forma-Tred Conduit Support Brackets mount to the Forma-Tred Scaffold by hooking over the Kickrails and bolting into the scaffold leg for a secure support for the lighting conduit. The "U" Bolts and nuts work on 1 1/4" round or square conduit.

Locate the centerline of the lighting fixture conduit and mark on the top of both Kickrails. Place a Forma-Tred Conduit Support Bracket in place and drill a 5/16" hole through the Kickrail and scaffold leg.

Place a 5/16" x 1 1/4" bolt through the hole in the center of the Conduit Support Bracket. Insert the Spacer over the bolt on the back side. Place Conduit Support Bracket over the top of the Kickrail with the end of the bolt through the drilled hole in the scaffold. Secure with a nut to the scaffold.

Conduit Support Bracket
Forma-Tred Scaffold

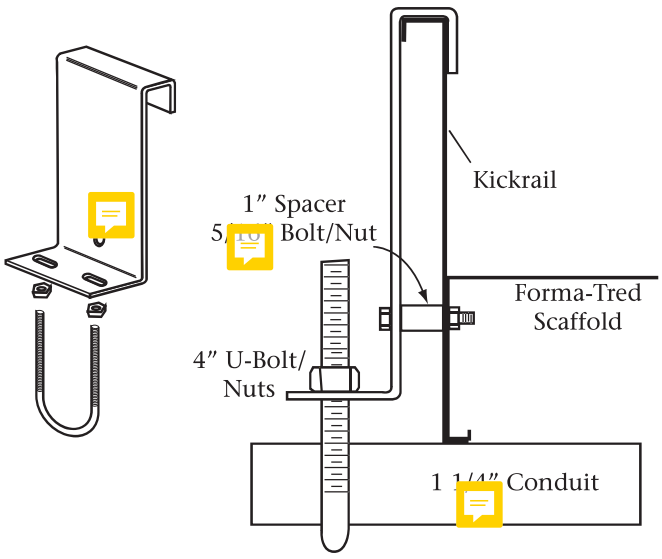

Install the "U" Bolt and attach the two nuts. Do not tighten. Place Conduit Support Brackets on the Kickrails on both sides of the scaffold. Insert the Formetco pre-wired conduit through the "U" Bolts. Position the end the proper distance from the face as required by the fixture manufacturer and tighten the "U" Bolts. Install the light fixtures.

Conduit Support Bracket
for 4' & 5" Angle Iron
Kickrails

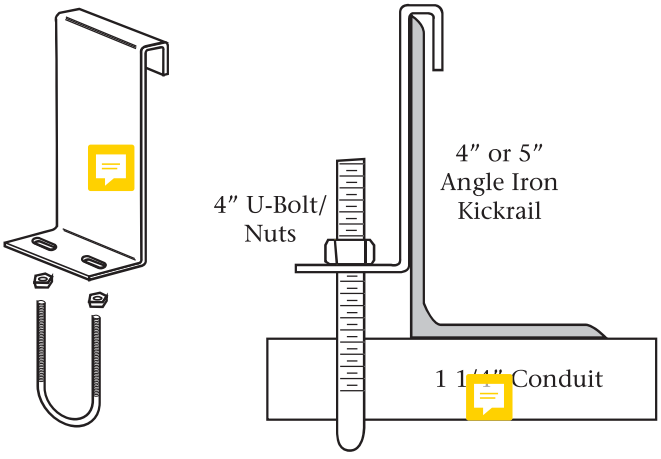

Formetco Angle Iron Conduit Support Bracket

Formetco Angle Iron Support Bracket is designed for 3" or 4"/5" angle iron kickrails. Attach the "U" Bolt to the Conduit Support Bracket and place the Conduit Support Bracket on the angle iron kickrail. Slide the Formetco Pre-Wired Conduit (round or square), or your conduit, through the "U" Bolt.

Position the end of the conduit to the requirements for the fixture and tighten the nuts on the "U" Bolts. Attach the fixture and connect the wiring.